Double flanged butterfly valves PN 25

Art. 5024

Flanges: UNI EN 1092-2 PN 25
Face to face length: EN 558-1, serie 14. DIN 3202 F4
Design EN 593
Installation: with stem in horizontal position
APPLICATIONS • Water supply • Drinking water • Waste water treatment plants

Epoxy paiting suitable for drinking water applications.

The double flanged butterfly valves with eccentric disc are applied in the pipelines as shut-off device and as regulation valves, thanks to the gear box that can stop the disc in many intermediate positions. These double flanged butterfly valves with regular face to face DIN 3202 F4 allows the perfect exchange with regular flat body gate valves, whenever needed. The double flanged butterfly valves have body and disc in GGG40-50, body seats in bronze, gasket on the disc in NBR. The double flanged butterfly valves can stand both directions of fluid, gasket seals are on the disc and can be replaced without dismantling the valves from the pipeline. The double flanged butterfly valves with double eccentric disc can be installed in drinking water plants, being painted with epoxy powder. The gear box is suitable for electric actuator and installation is easy, taking off the handwheel from the gear box itself.

Materials

body	ductile iron GGG40-50, EN-GJS-400/500-15
disc	ductile iron GGG40-50, EN-GJS-400/500-15
gear box	cast iron GG25, EN-GJL-250
handwheel	cast iron GG25, EN-GJL-250
stem	stainless steel X 20 CR 13
body seat ring	stainless steel 304
painting	epoxy 250 mcr min.

Dimensions

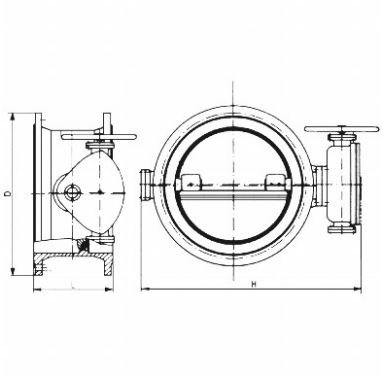

DN	L mm.	H mm.	D mm.	Weight kg.
150	210	450	300	56
200	230	533	360	89
250	250	600	425	117
300	270	715	485	146
350	290	765	555	218
400	310	850	620	238
450	330	965	670	325
500	350	1080	730	400
600	390	1220	845	504
700	430	1307	960	757
800	470	1542	1085	1020
900	510	1670	1185	1350
1000	550	1770	1320	1790
1200	630	1962	1530	2690
1400	710	2230	1755	3200
1600	790	2510	1930	3800

Pressure

DN	Nominal pressure	Test pressure Mpa		Max working pressure Mpa
mm	BAR	body	seat	80°C
150-1600	25	3,75	2,75	2,5

Valvotubi ind. S.r.l. ®
Via M.Monti 30/b
48123 Ravenna, Italy

ph +39 0544 452279
fax +39 0544 451148

info@valvotubi.it
www.valvotubi.it